Printed Pages : 4

EE201

(Following Paper ID and Roll No. to be filled in your Answer Book)

**PAPER ID : 199213**

Roll No. | | | | | | | | | | |

# B. Tech.

## (SEM. II) THEORY EXAMINATION, 2014-15

## ELECTRICAL ENGINEERING

Time : **3** Hours] [Total Marks : **100**

**Note :** Attempt **All** Questions. **All** Questions carry **equal** marks.

**1** Answer any four parts of the following : **5x4=20**

a) Three resistances r, 2r and 3r are connected in delta. Determine the resistances for anequivalent star connection. Prove formula used.

b) State and explain Super position theorem. Determine the current through $6\Omega$ resistor.

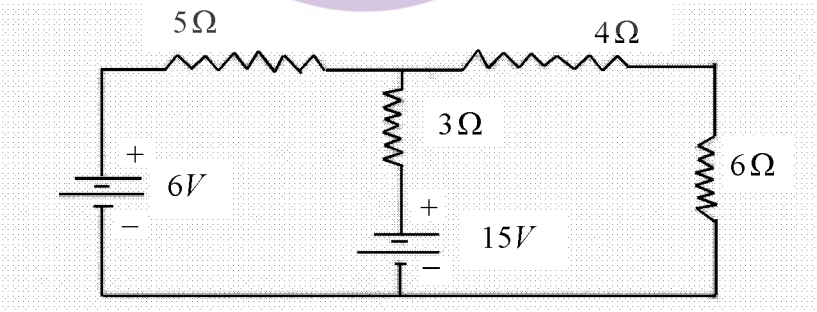


**Fig.1**

c) Define the following terms:

(i) Active and passive elements

(ii) Voltage and current source

(iii) Unilateral and bilateral elements

d) State and prove the Maximum Power Transfer Theorem.

e) Find the Norton equivalent for the network shown in the fig 2.

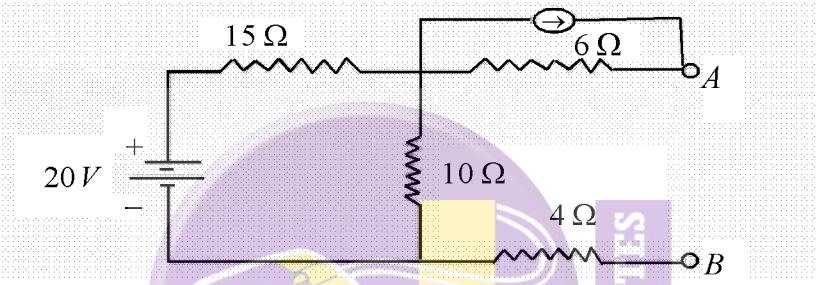


**Fig.2**

f) Determine the current through 2 Ω resistor in the network by Thevenin's Theorem.

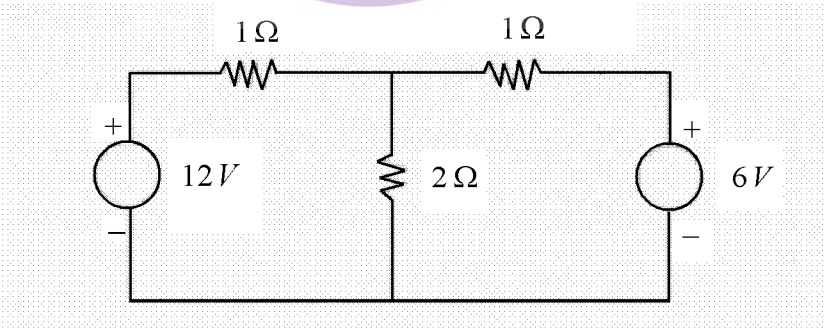


**Fig.3**

**2** Answer any four parts of the following: **5x4=20**

a) Deduce an expression for the resonant frequency of a series R-L-C ac circuit.

b) Explain active, reactive and apparent power.

c) A circuit takes a current $i=20 \sin(314t-\pi/6)$ amperes when the supply voltage is $v = 100 \sin 314 t$. calculate the impedance, phase angle, resistance and inductance of the circuit.

d) A coil in parallel with a 200μF capacitor is connected across a 200v, 50 Hz supply. The coil takes a current of 8A and loss in the coil is 960W. Calculate the resistance, inductance of the coil and power factor of the entire circuit.

e) Why series resonant circuit is called as an accepter circuit? Explain bandwidth and quality factor of series resonant circuit.

f) Three impedances $(6+j5)\,\Omega$, $(8-j6)\,\Omega$ and $(8+j10)$ are connected in parallel. Calculate the current in each branch when the total current is 20 A.

**3** Answer any two parts of the following: **10x2=20**

a) Compare 3 phase star and delta connected systems. Show the total power in these connections remains same. A balanced 3 phase star connected load takes a power of 5 kW at 0.8 pf lagging when connected to a 400 V, 3 phase supply. Calculate the line current and impedance per phase of the load.

b) Explain moving iron instruments working principle as an ammeter.

c) Explain the principle of operation of a single phase transformer.

A 230/460 V transformer has a primary resistance of $0.2\,\Omega$ and a resistance of $0.5\,\Omega$ and the corresponding values for the secondary are $0.75\,\Omega$ and $1.8\,\Omega$ respectively. Find the secondary terminal voltage when supplying

(i) 10 A at 0.8 p.f. lagging

(ii) 10 A at 0.8 p.f. leading.

**4** Answer any two parts of the following: **10x2=2**

a) Explain two wattmeter method to measure three phase power with suitable diagram.

b) Power in a 3-phase circuit is measured by two wattmeters and the readings of the wattmeters are 5 kW and 0.5 kW, the latter reading being obtained after reversal of the current coil connection. Find the total power, and power factor of the circuit.

c) Explain different types of d.c. machines and derive emf equation.

**5** Answer any two parts of the following: **10x2=20**

a) Rotor of 3 phase induction motor cannot run at synchronous speed. Explain a three phase slip ring, 4 pole induction motor has rotor frequency 2.0 Hz while connected to 400 V, 3 phase, 50 Hz supply determine slip and rotor speed.

b) Draw torque-speed characteristics of 3 phaseinduction motor. Show the different operatingregions. What will happen if rotor resistance ofmotor changes?

c) Why single phase induction motor is not self-starting? Explain method to start it.